ZIP Radiant Ceiling Panels

Submittal Data

English Language, IP Units

Heating | Cooling | Fresh Air | Clean Air

Submittal data

Project	
Job number	
Architect	
Engineer	
Contractor	

Performance data: heating

Mean water temperature	°F
Design room temperature	°F
Heating capacity	BTU/hr ft

Performance data: cooling

Mean water temperature	°F
Design room temperature	°F
Cooling capacity	BTU/hr ft²

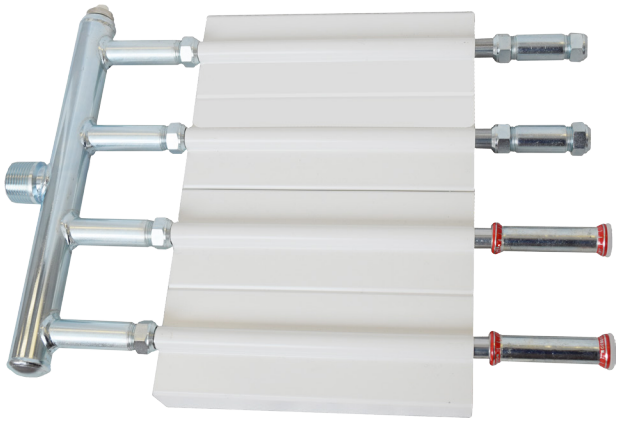

ZIP Radiant Ceiling Panels Submittal Data

English, IP Units

Table of contents

*Page number

Unit features . . . 1

General data . . . 3

Dimensional data . . . 4

Mechanical specifications . . . 10

Cut sheets

- Hanging kits . . . 12
- Flow control valve . . . 17
- Compression fitting . . . 19
- Screw fitting . . . 20
- Stainless steel flexible hose . . . 21
- Z-Profile clip . . . 22
- Double Z-Profile clip . . . 23

Warranty . . . 24

Features

Zehnder Rittling ZIP Radiant Ceiling Panel, made of 26 gauge sheet steel galvanized on both sides, with Zehnder Rittling special clip profiling to accommodate four 15 mm (5/8") O.D. precision steel tubes in line with DIN EN 10305-3. Outside surface of radiation panel coated with polyester lacquer similar to RAL 9016, opposite side with protecting lacquer. Suitable for operating temperatures up to 203°F (95°C), maximum operating pressure 73 PSIG (5 Bar).

Folded side flanges and galvanized box-section crossbars stiffen the steel sheeting and provide mounting for suspension. Two sheet-metal end elements close off the ends of the radiant panels.

A panel can be attached directly to the integral suspension bars in a fixed grid arrangement or, if several are arranged in parallel, by using a common multi-suspension bar with only two points for fixing to the ceiling.

The 1-1/4" (32 mm) diameter tubular headers are furnished with a 1" externally threaded connection boss, blank cover and an oppositely located 1/2" sleeve as vent/drain. The headers are supplied loose and are installed on site. They are connected to the panel or the panel modules by tightening the threaded couplings.

The 12-5/8" (320 mm) wide modules are supplied, ready-to-install, in nominal lengths of 6.6' (2m), 9.8' (3m), 13.1' (4m), 16.4' (5m), 19.7' (6m) according to requirements. The individual modules are joined with threaded or press fit connectors. The joints are concealed with clip fit, lacquer finished, cover plates.

The Zehnder Rittling ZIP Radiant Ceiling Panels are protected against corrosion. The relevant test was carried out in accordance with DIN 50017 “Condensation Water Test Atmosphere.”

There is also a version especially for damp locations. This includes fitted insulation with a galvanized top cover added on site.

Compression coupling:
15 mm (5/8") galvanized compression fittings.

Threaded coupling:
15 mm (5/8") galvanized clamp-ring coupling.

Connector Technology:
If you are using two or more individual elements, they will need to be connected to one another. The individual elements are assembled into the desired configuration by means of press-fit connections and the joints are then hidden under a cover. The headers are painted as standard.

☐ Optional features

☐ **Cover plates:**
Made of 26 gauge sheet steel, galvanized on both sides, polyester-lacquered on external surface, for covering the compression or threaded couplings.

Fastening methods:
☐ Installation Kit KN 53 for fastening to concrete ceilings.

☐ Installation Kit KN 54 for fastening to steel section.

☐ Installation Kit KN 56 for fastening to trapezoidally formed sheet steel.

☐ Installation Kit KN 57 for fastening to tilted steel girders.

☐ Installation Kit KN 58 for fastening to horizontal steel girders.

☐ **Z-Profile clip:**
For edge mounting of panel directly to ceiling.

☐ **Double Z-Profile clip:**
For edge mounting of panels directly to ceiling, located between two panels.

☐ **Ball guard:**
Curved wire mesh is installed on top of the panel to protect pipes and to inhibit balls from getting stuck on top of the panels. Tested for ball impact resistance in accordance with
DIN 18032.

☐ **Volumetric flow controller:**
Zehnder Rittling combined volumetric 2-way flow controller valve for flow and return, up to 212°F (100°C), differential pressure up to 58 PSIG, PN 232 PSIG, volumetric range 0.66-4.6 GPM, consisting of: controller for return, complete with shut-off valve, filling valve, drain valve and threaded connector.

☐ **Stainless steel flexible hoses:**
Zehnder Rittling armored flexible tubing with suitability verification by the Technical Control Board, Germany for use in heating installations, consisting of temperature and aging resistant EPDM with woven stainless steel braiding PN 145 PSIG, length 19-5/8" (500 mm).

ZIP Radiant Ceiling Panels Submittal Data

English, IP Units

General data

Designation/Version	Zehnder Rittling ZIP
Tube spacing	3-1/8" (80 mm)
Tube outside diameter	5/8" (15 mm)
Overall width of radiant ceiling panel	12-5/8" (320 mm)
Number of suspensions per bar	2
Heat output of radiant ceiling panel. Heat output tested as per EN 14037 (standard superseding DIN V 4706 parts 1 and 2)	710 BTU/m run
Cooling capacity ZIP at ΔT = 18°F	121 BTU/m run
Cooling capacity ZIP without thermal insulation at ΔT = 18°F	143 BTU/m run
Cooling capacity collector pair at ΔT = 18°F	34 BTU/header pair
Operating weight of radiant ceiling panel without water content and insulation	2.79 lbs./ft.
Operating weight of radiant ceiling panel with water content and insulation	3.15 lbs./ft.
Water content per lfm ZIP	0.36 lbs./ft.

Notes:
- Maximum operating temperature: 203°F (95°C).
- Maximum operating pressure: 73 PSIG (5 Bar).
- Higher operating temperatures and pressures available on request.
- ΔT is the difference between surface and room temperature.

Heating Output

ΔT		ZIP1 Output		Header Pair	
°F	°C	BTUH/ft	W/m	BTUH	W
144	80	333	320	314	92
140	78	322	309	303	89
136	76	312	299	291	85
132	73	301	289	279	82
128	71	291	279	268	78
124	69	280	269	257	75
120	67	270	259	246	72
116	64	260	249	235	69
112	62	250	239	224	66
108	60	239	230	213	62
104	58	229	220	202	59
100	56	219	210	192	56
96	53	209	201	182	53
92	51	199	191	171	50
88	49	189	182	161	47
84	47	180	172	152	44
80	44	170	163	142	42
76	42	160	153	132	39
72	40	150	144	123	36
68	38	141	135	114	33
64	36	131	126	105	31
60	33	122	117	96	28
56	31	113	108	88	26
52	29	104	99	79	23
48	27	94	90	71	21
44	24	86	82	63	19
40	22	77	73	56	16

Notes:
- A header pair is the additional heating capacity by each pair of supply and return headers.
- ΔT is the difference between surface and room temperature.

Cooling Output with Insulation

Cooling Output with insulation					
ΔT		ZIP1 Output		Header Pair	Header Pair
°F	(°C)	BTUH/ft	(W/m)	BTUH	W
30	17	62	60	58	17
26	14	54	52	48	14
22	12	45	44	41	12
18	10	37	36	34	10
14	8	29	27	27	8
10	6	20	19	20	6
6	3	12	12	10	3
2	1	4	4	3	1

Cooling Output without Insulation

Cooling Output with insulation					
ΔT		ZIP1 Output		Header Pair	Header Pair
°F	(°C)	BTUH/ft	(W/m)	BTUH	W
30	17	77	74	58	17
26	14	62	60	48	14
22	12	53	51	41	12
18	10	44	42	34	10
14	8	35	34	27	8
10	6	26	25	20	6
6	3	12	12	10	3
2	1	4	4	3	1

ZIP Radiant Ceiling Panels Submittal Data

English, IP Units

Dimensional data, standard

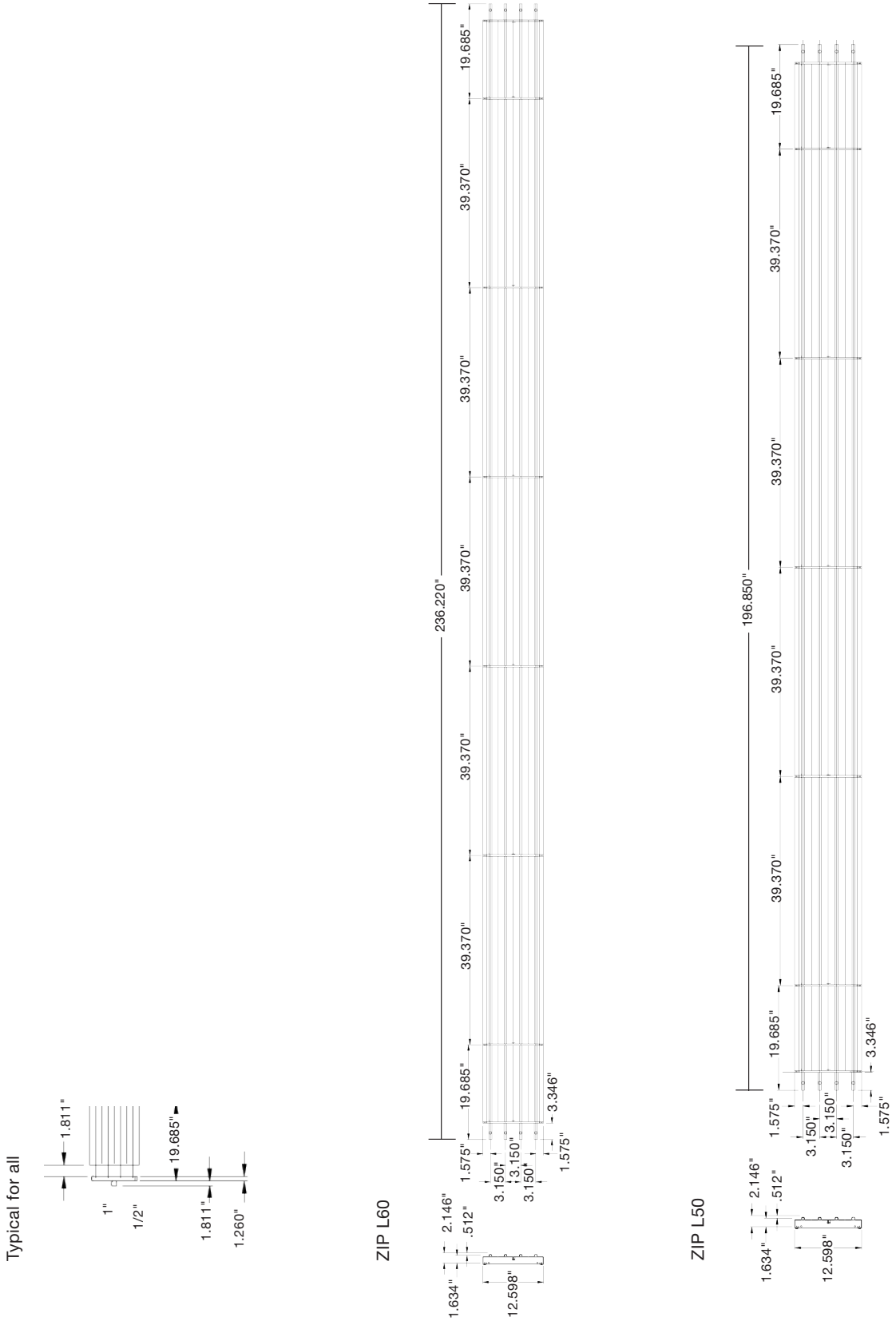

ZIP Radiant Ceiling Panels Submittal Data

English, IP Units

Dimensional data, standard

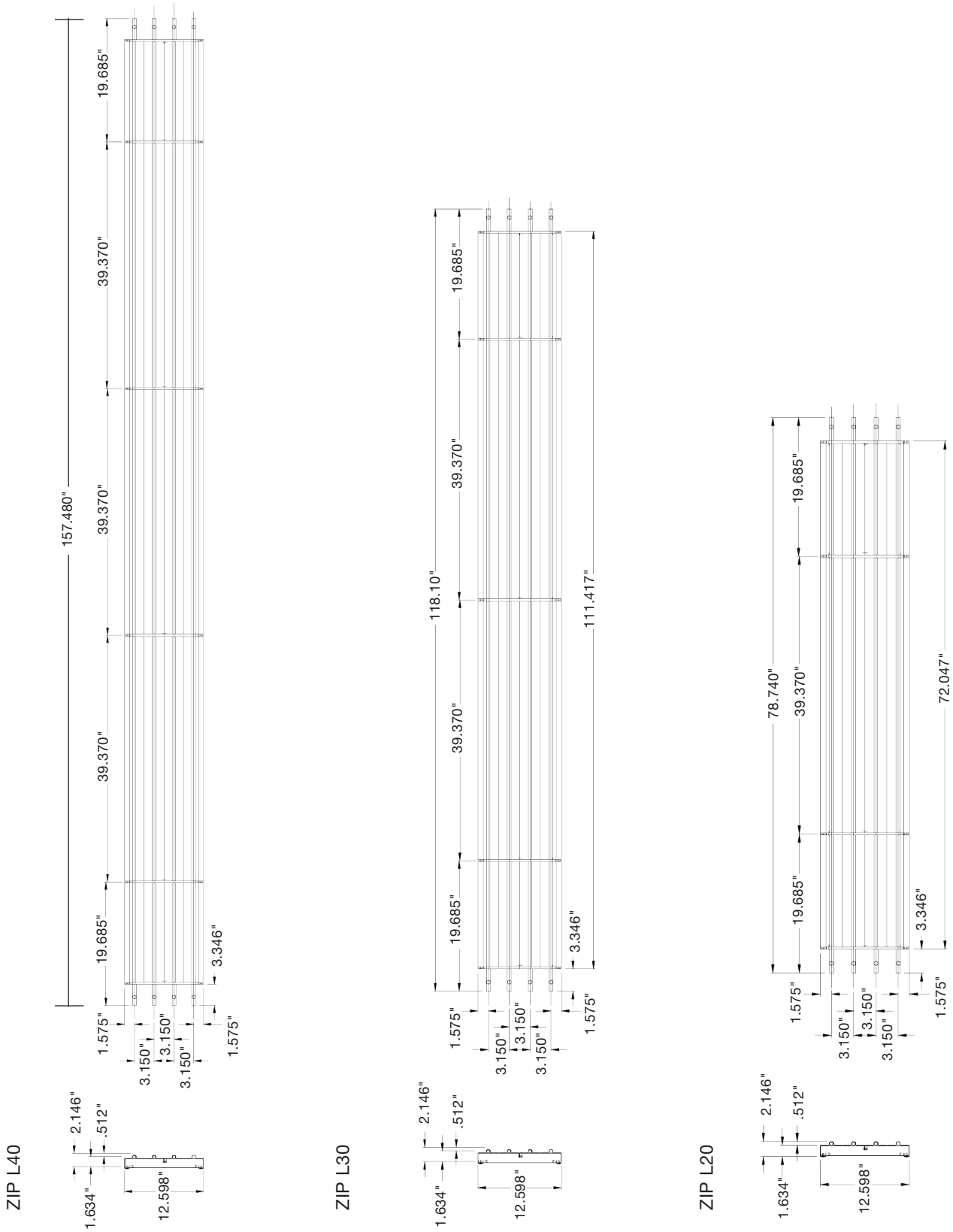

Revised August 2017. Zehnder Rittling periodically makes changes to the design and/or specifications of its products. As a result, the design and specifications of each product at the time of order may be different than as described herein. Please contact Zehnder Rittling's Sales Support staff at 844-934-6337 for specific information on current design and specifications. Designs, specifications and other information contained herein are not express warranties, which are only as expressly set forth by Zehnder Rittling in its terms and conditions of sale. The latest version of this document is available at www.zehnder-rittling.com.

ZIP Radiant Ceiling Panels Submittal Data

English, IP Units

Dimensional data, standard

ZIP 1

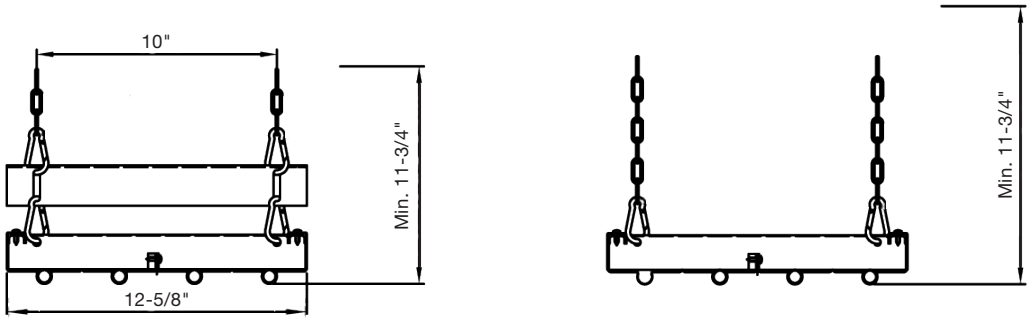

ZIP 2

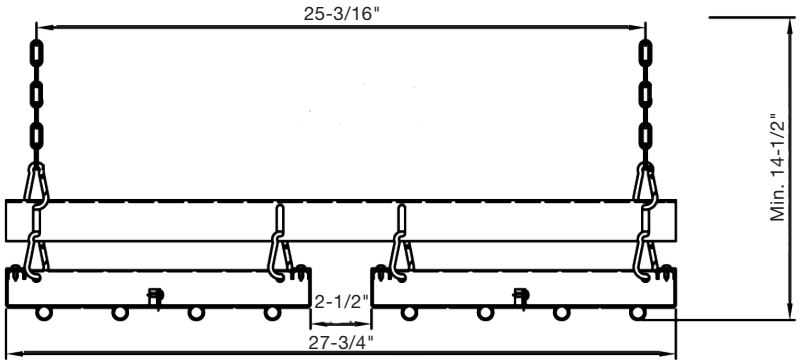

ZIP 3

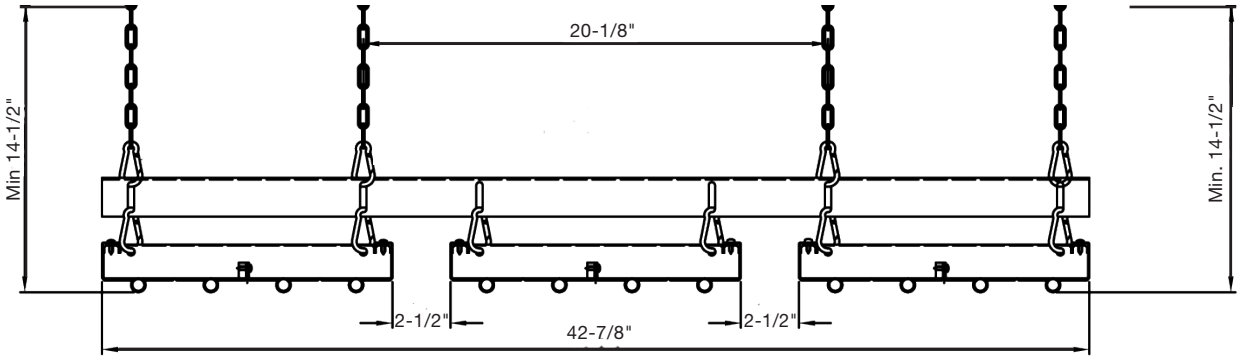

ZIP 4

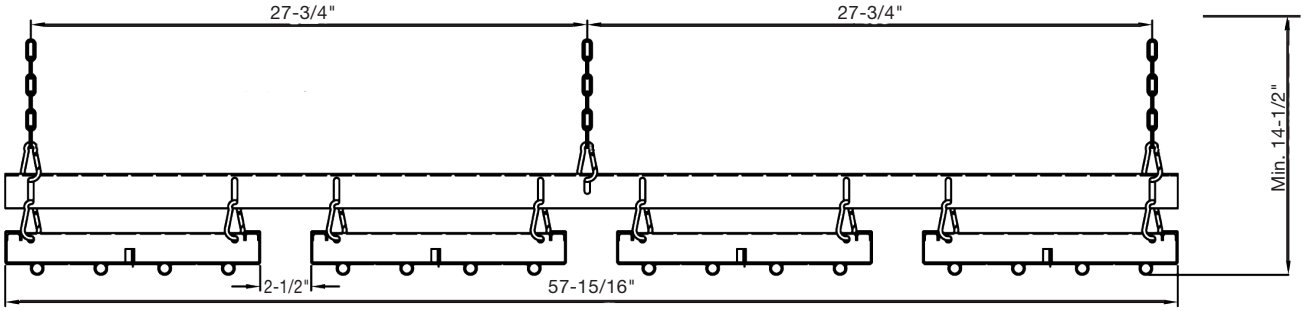

Dimensional data, superimposed

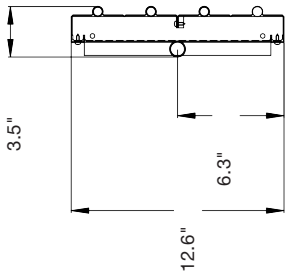

Typical for all

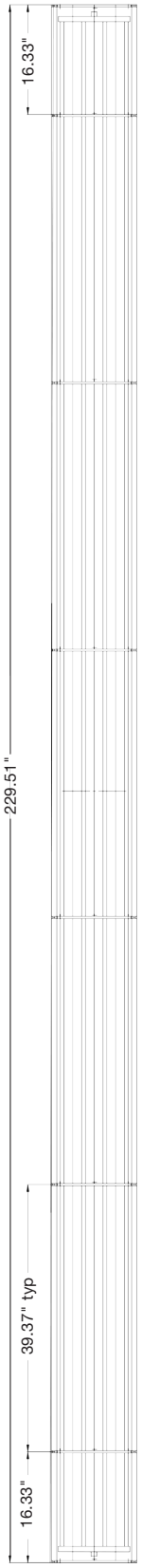

ZIP L60

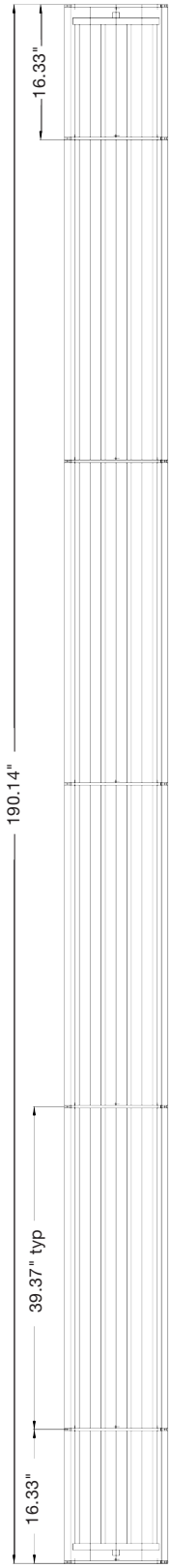

ZIP L50

ZIP Radiant Ceiling Panels Submittal Data

English, IP Units

Dimensional data, superimposed

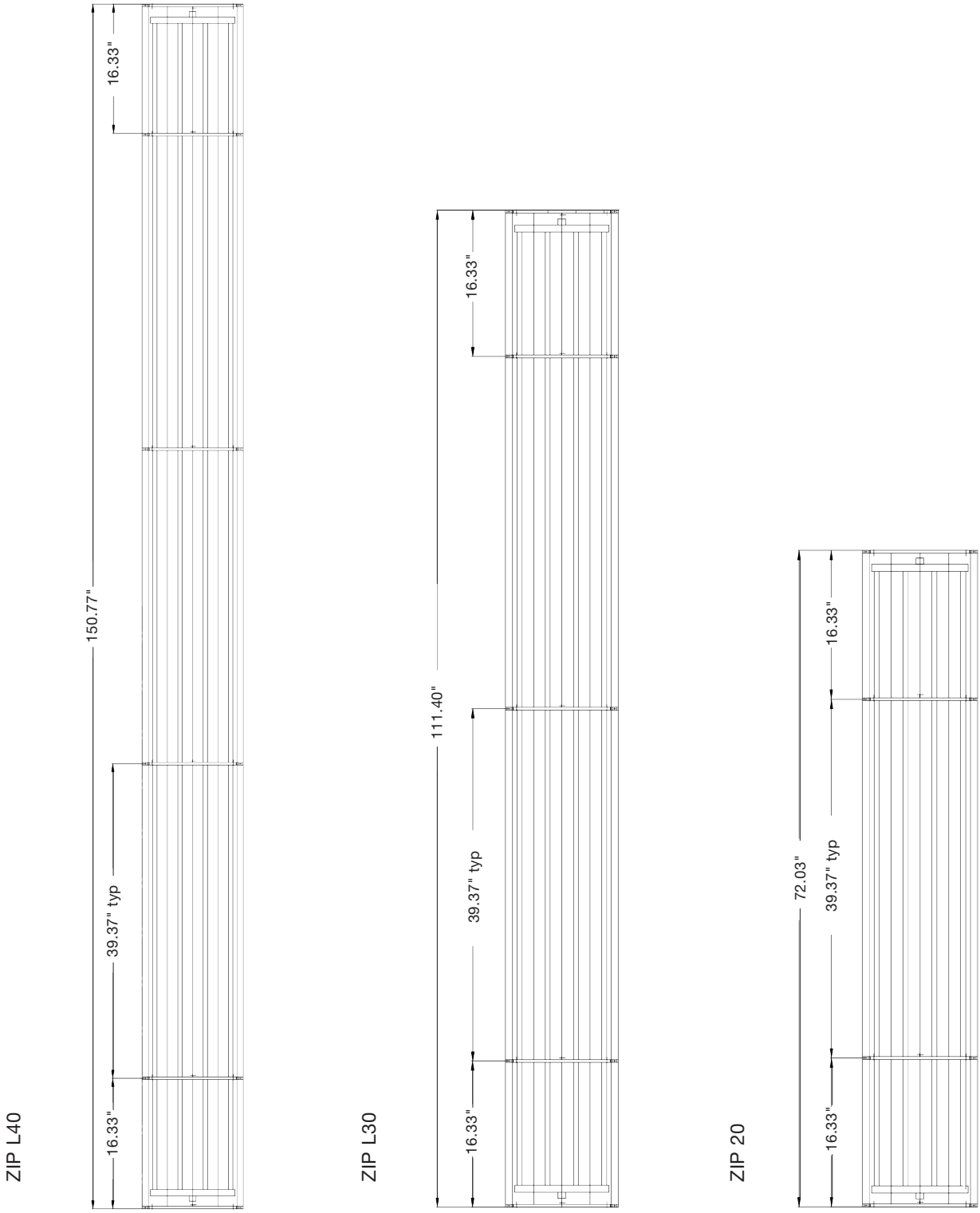

ZIP Radiant Ceiling Panels Submittal Data

English, IP Units

Dimensional data, ball guard

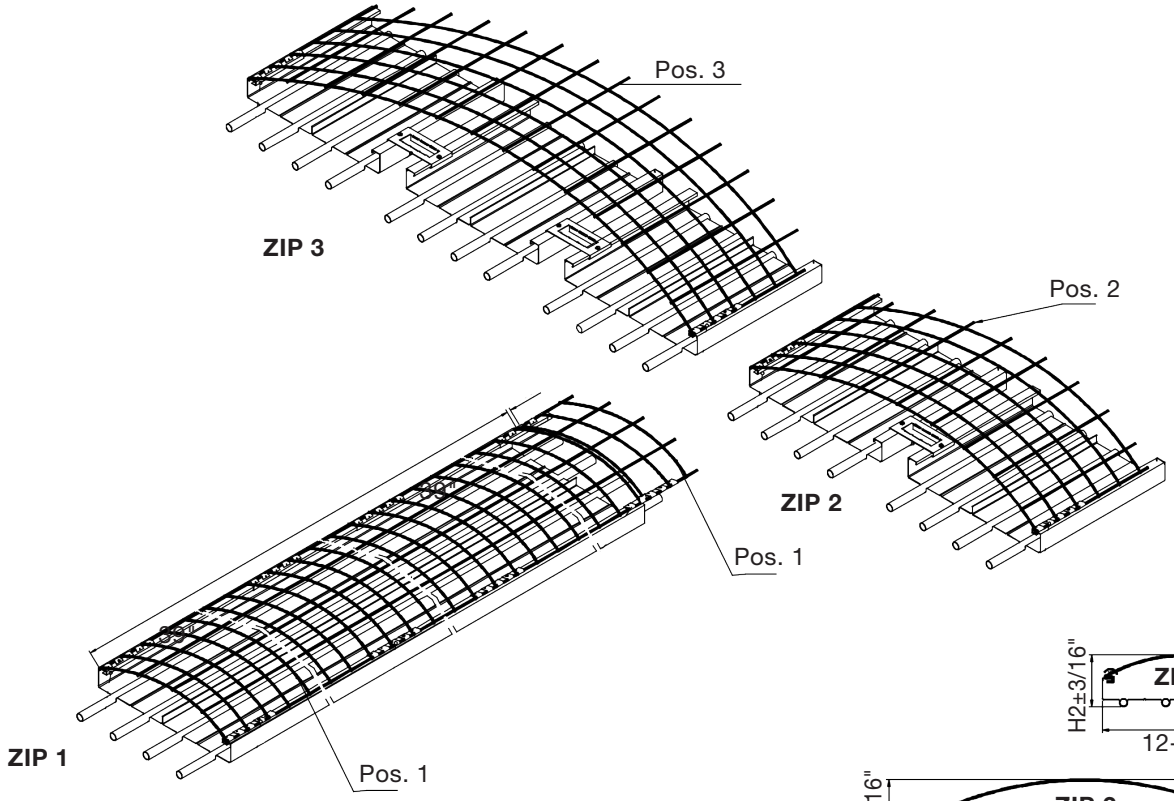

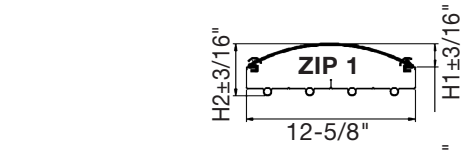

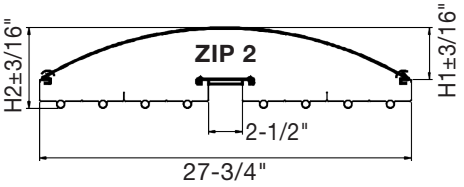

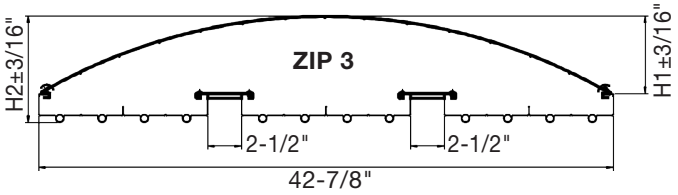

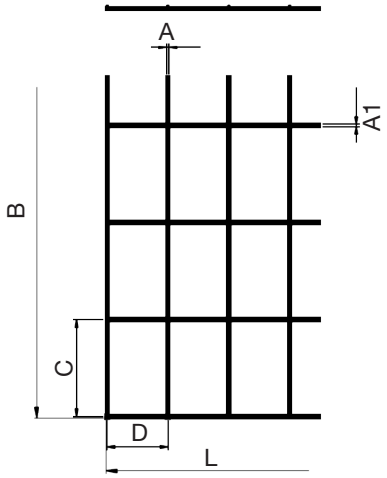

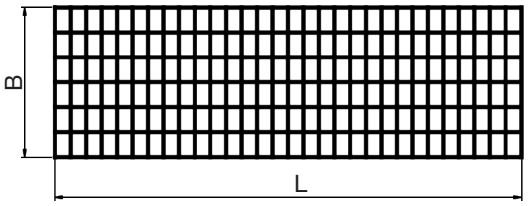

Pos.	Model	Length	Width	C	D	Wire thickness		Ball guard installed height	Overall height installed ball guard
		L	B			A	A1	H1	H2
1	ZIP 1	39"	12-5/8"	80	1-3/4"	5/64"	5/64"	1-3/4"	4"
2	ZIP 2		28-3/8"					4"	6-1/8"
3	Zip 3		44-1/16					5-7/8"	7-7/8"

Mechanical specifications

The material
Zehnder Rittling ZIP Radiant Ceiling Panels are made from 26 gauge galvanized sheet steel with Zehnder Rittling special clip profiling. Each one accommodates four 15mm (5/8") O.D. precision steel tubes in line with DIN EN 10305-3 and 1/2" fiberglass insulation with foil backing, fiber backing or wrapped in LDPE foil.

Folded side flanges and galvanized box-section crossbars stiffen the steel sheeting and provide mounting for suspension. Two sheet-metal end elements close off the ends of the radiant panels.

The outside surface is polyester lacquer coated. The inside surface is coated with a protecting lacquer.

The Zehnder Rittling ZIP Radiant Ceiling Panels are protected against corrosion in accordance with DIN 50017 "Condensation Water Test Atmosphere".

The four clip-retained precision steel tubes are welded and sized in accordance with DIN EN 10305-3. The pipe ends are chamfered for the use of threaded or compression-type couplings. They thereby ensure maximum and constant heat transfer.

Suitable for operating temperatures up to 203°F (95°C) and maximum operating pressures up to 73 psig (5 bar).

The headers
Round tubing with a diameter of 1-1/4" (32 mm). The headers and collectors are fitted with a 1" externally threaded connecting boss and an oppositely located 1/2" sleeve as vent/drain. The various header configurations permit customized panel connections and are shipped loose for field installation.

Compression coupling:
15 mm (5/8") galvanized compression fittings.

Threaded coupling:
15 mm (5/8") galvanized clamp-ring coupling.

Cover plates:
Made of 26 gauge sheet steel, galvanized on both sides, polyester-lacquered on external surface, for covering the compression or threaded couplings.

Fastening methods:
Installation Kit KN 53 for fastening to concrete ceilings.

Installation Kit KN 54 for fastening to steel section.

Installation Kit KN 56 for fastening to trapezoidally formed sheet steel.

Installation Kit KN 57 for fastening to tilted steel girders.

Installation Kit KN 58 for fastening to horizontal steel girders.

Z-Profile clip:
For edge mounting of panel directly to ceiling.

Double Z-Profile clip:
For edge mounting of panels directly to ceiling, located between two panels.

Ball guard:
Curved wire mesh is installed on top of the panel to protect pipes and to inhibit balls from getting stuck on top of the panels. Tested for ball impact resistance in accordance with DIN 18032.

Mechanical specifications

Volumetric flow controller:
Zehnder Rittling combined volumetric 2-way flow controller valve for flow and return, up to 212°F (100°C), differential pressure up to 58 PSIG, PN 232 PSIG, volumetric range 0.66-4.6 GPM, consisting of: controller for return, complete with shut-off valve, filling valve, drain valve and threaded connector.

Stainless steel flexible hoses:
Zehnder Rittling armored flexible tubing with suitability verification by the Technical Control Board, Germany for use in heating installations, consisting of temperature and aging resistant EPDM with woven stainless steel braiding, PN 145 PSIG, length 19-5/8" (500 mm).

Installation method
Zehnder Rittling supplies the modules, ready-to-install, in lengths of 6.6' (2m), 9.8' (3m), 13.1' (4m), 16.4' (5m), 19.7' (6m) and a width of 12-5/8" (320 mm). The individual modules can be joined together with the Zehnder Rittling threaded couplings or alternative Zehnder Rittling press fittings, making the job simple and quick. Simple, clip-on cover plates then conceal the joints. The headers are fixed to the modules during installation with the threaded couplings. The panels are suspended with chain hanging sets fixed directly to the integral suspension bars, or if several parallel modules are installed, by using a multiple suspension bar with only two chain hanging sets per suspension bar.

Hanging Kit, concrete ceiling, KN 53

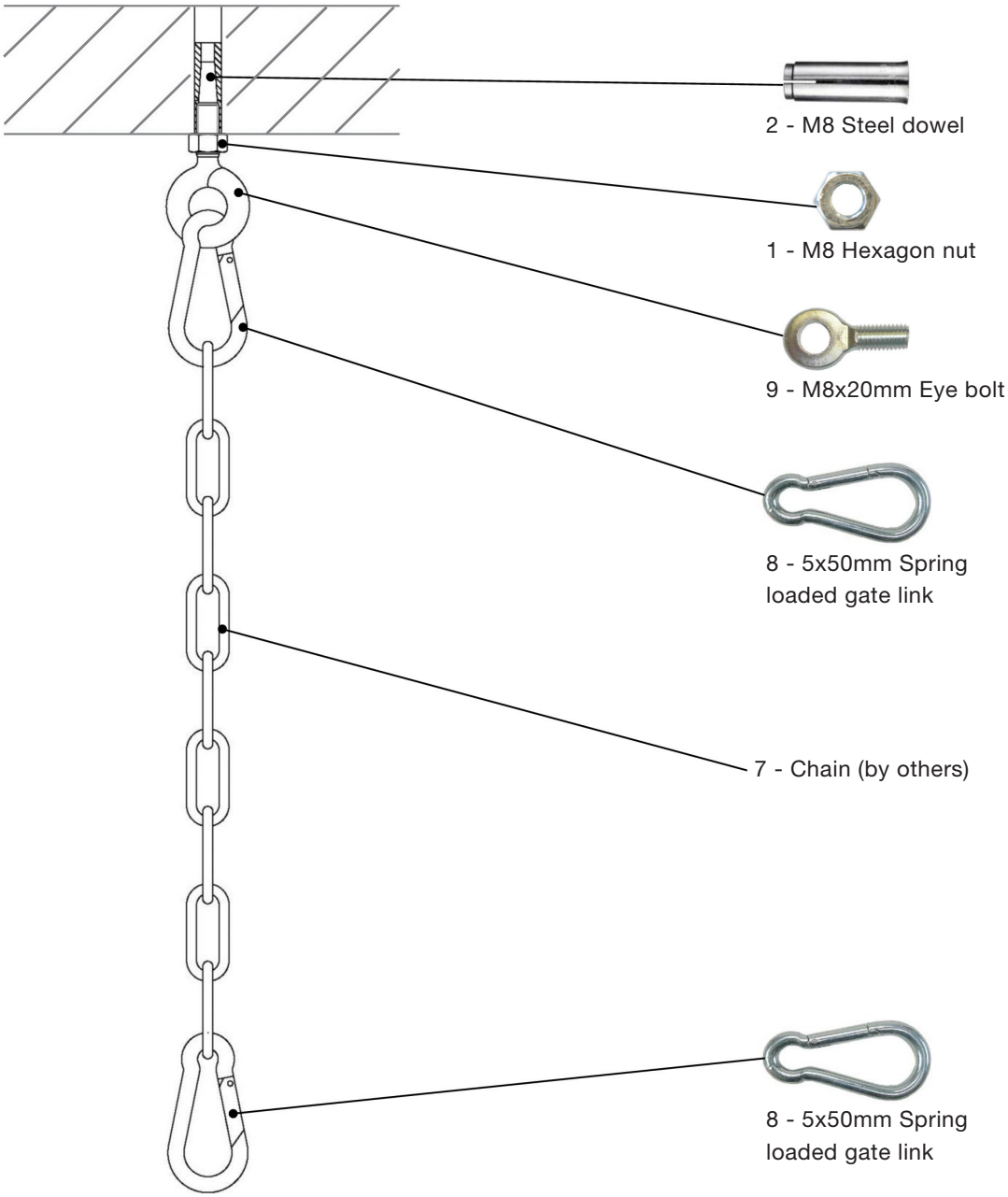

Number	Designation
1	M8 Hexagon nut
2	Push-in anchor
3	M8 Carrier clamp
4	Security clip
5	M8 Leaf screw
6	M8 Trapezoidal hanger
7	Chain link (by others)
8	5x50 Spring loaded gate link
9	M8 Eye bolt
10	Washer
11	M8x40 Hex bolt
12	M8x110 Hex bolt

Hanging Kit, steel, KN 54

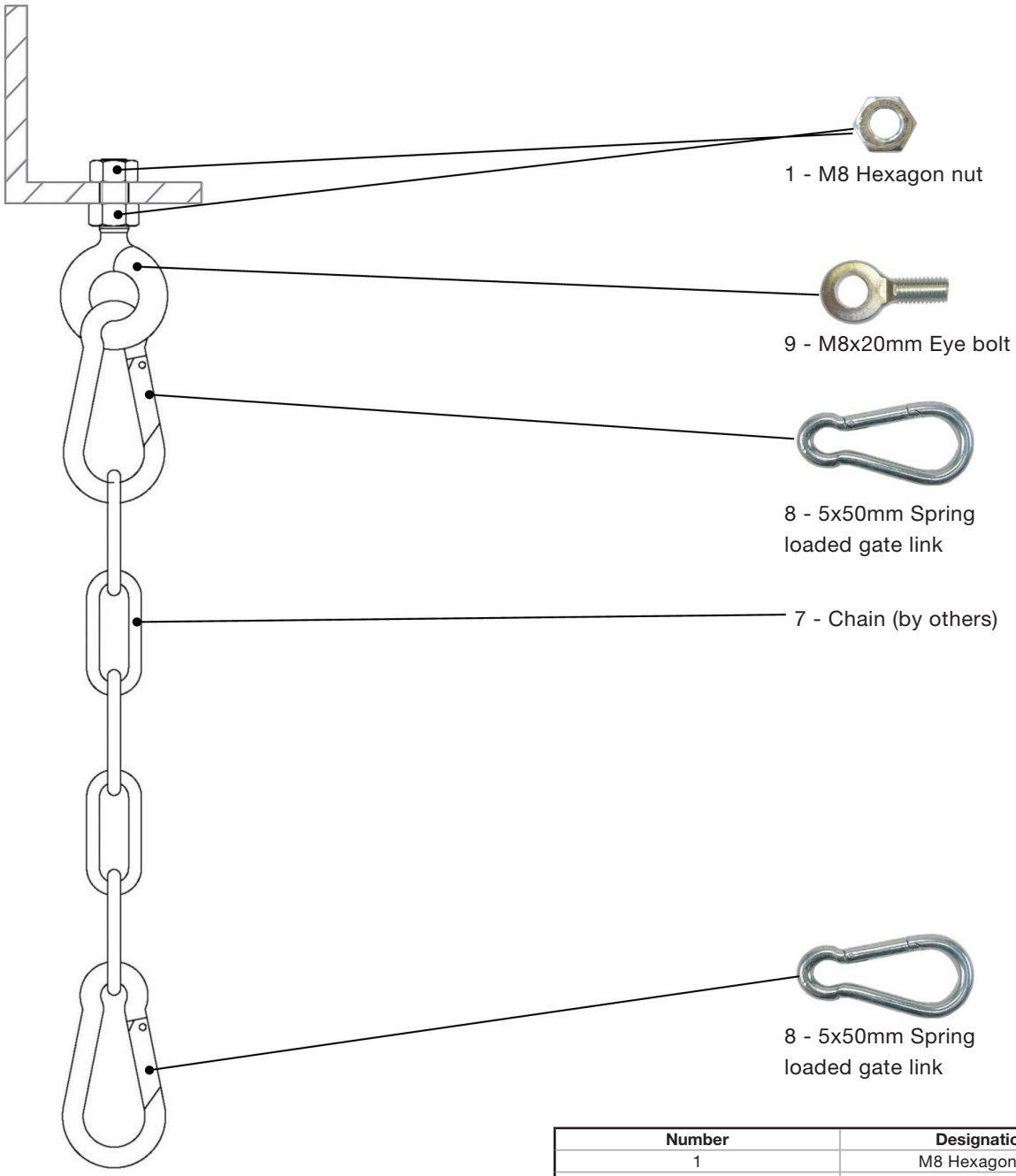

Number	Designation
1	M8 Hexagon nut
2	Push-in anchor
3	M8 Carrier clamp
4	Security clip
5	M8 Leaf screw
6	M8 Trapezoidal hanger
7	Chain link (by others)
8	5x50 Spring loaded gate link
9	M8 Eye bolt
10	Washer
11	M8x40 Hex bolt
12	M8x110 Hex bolt

Hanging Kit, trapezoidal, KN 56

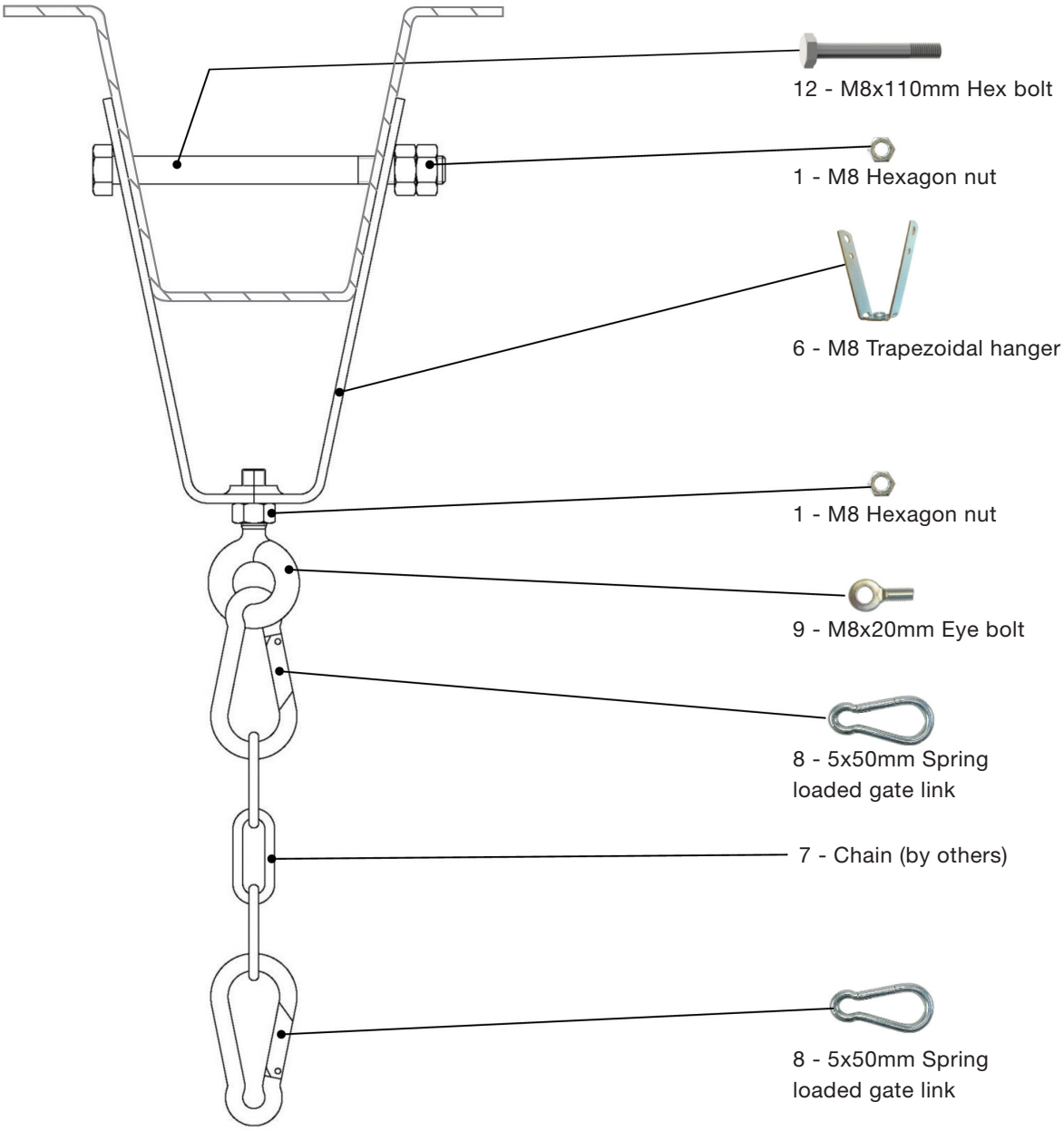

Number	Designation
1	M8 Hexagon nut
2	Push-in anchor
3	M8 Carrier clamp
4	Security clip
5	M8 Leaf screw
6	M8 Trapezoidal hanger
7	Chain link (by others)
8	5x50 Spring loaded gate link
9	M8 Eye bolt
10	Washer
11	M8x40 Hex bolt
12	M8x110 Hex bolt

Hanging Kit, inclined beam, KN 57

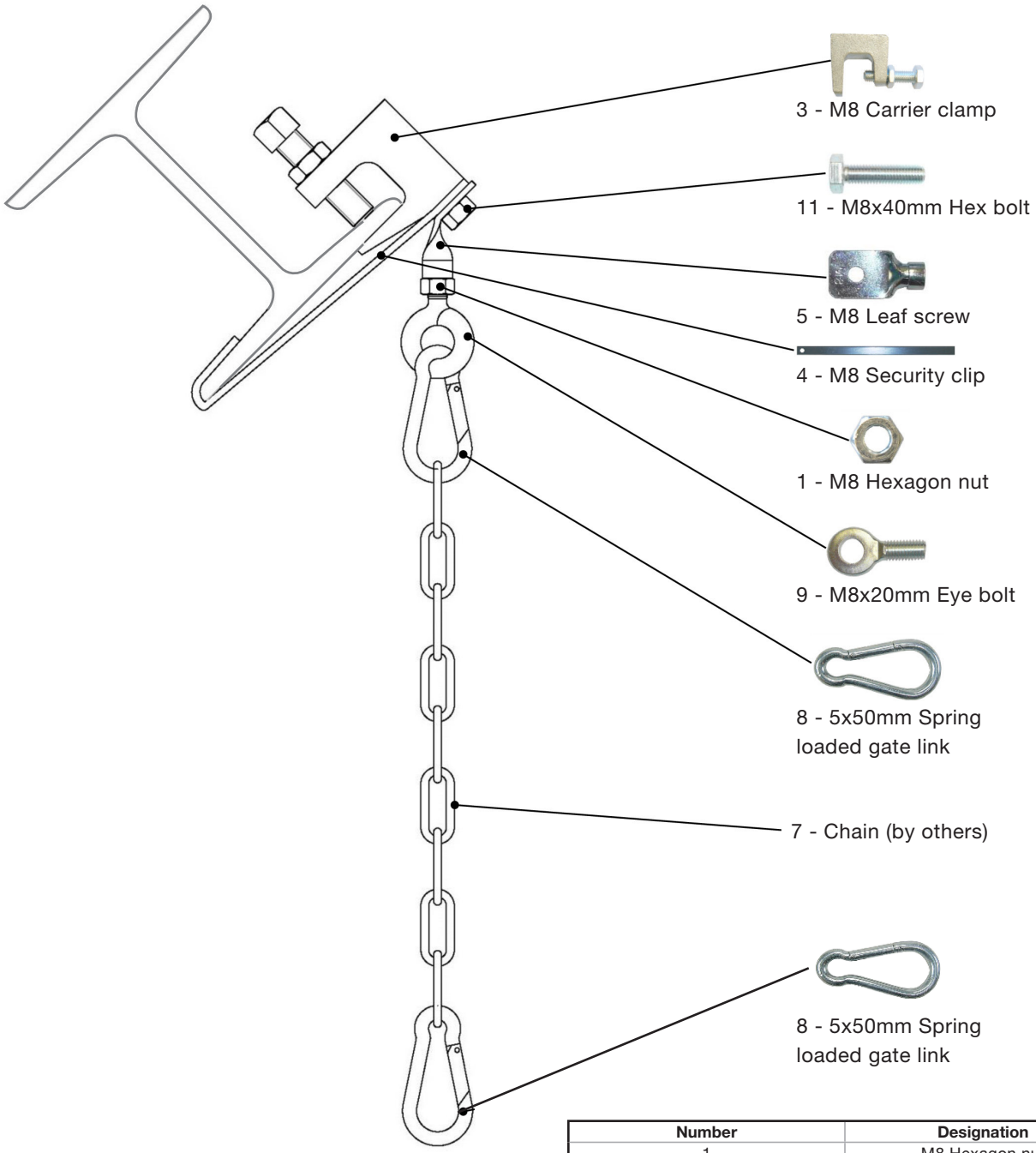

Number	Designation
1	M8 Hexagon nut
2	Push-in anchor
3	M8 Carrier clamp
4	Security clip
5	M8 Leaf screw
6	M8 Trapezoidal hanger
7	Chain link (by others)
8	5x50 Spring loaded gate link
9	M8 Eye bolt
10	Washer
11	M8x40 Hex bolt
12	M8x110 Hex bolt

Hanging Kit, horizontal beam, KN 58

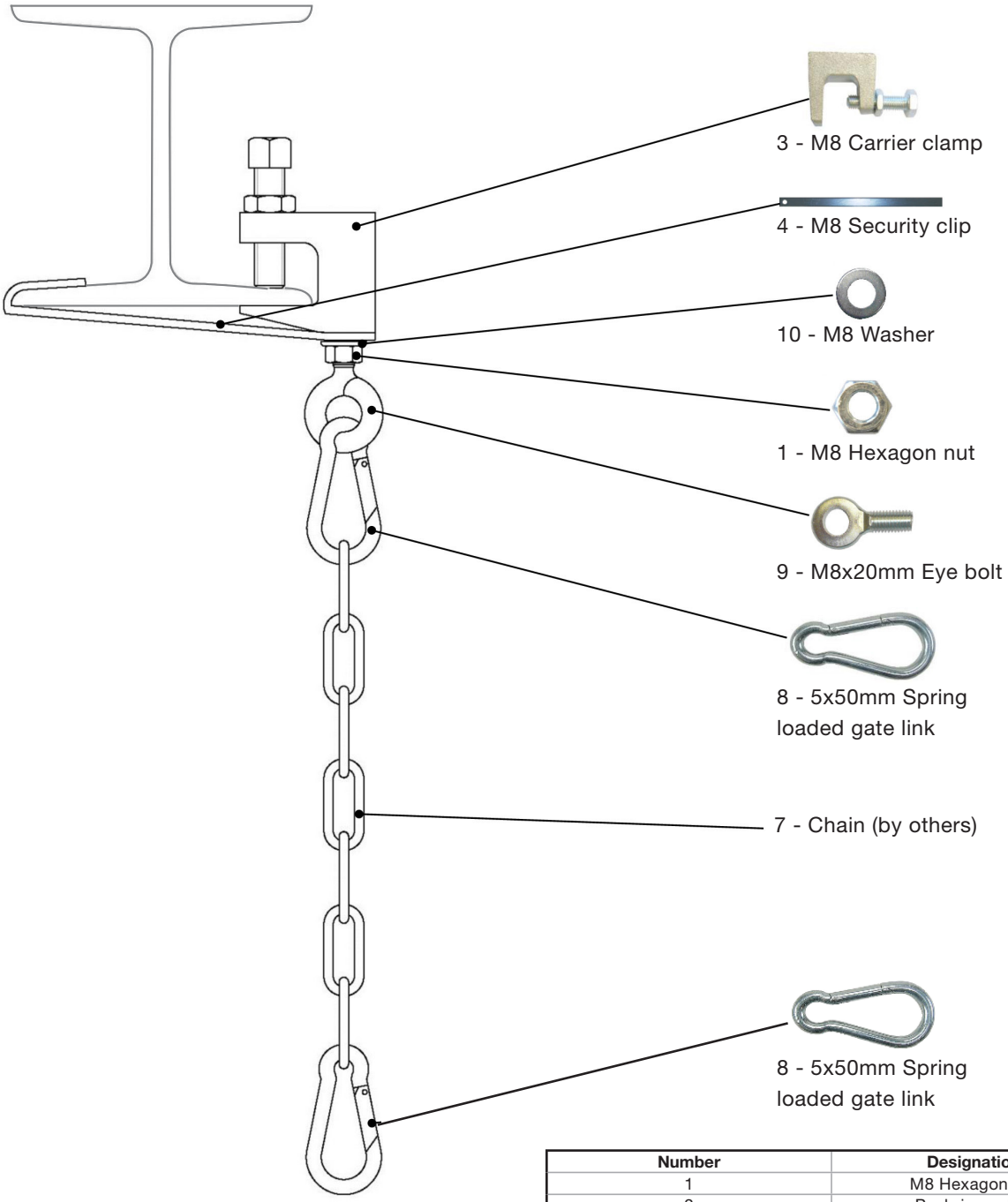

Number	Designation
1	M8 Hexagon nut
2	Push-in anchor
3	M8 Carrier clamp
4	Security clip
5	M8 Leaf screw
6	M8 Trapezoidal hanger
7	Chain link (by others)
8	5x50 Spring loaded gate link
9	M8 Eye bolt
10	Washer
11	M8x40 Hex bolt
12	M8x110 Hex bolt

Flow control valve

Application

The flow control valve consists of a flow regulator and an isolating valve. The flow regulator is a valve combination consisting of an automatic flow regulator (with a nominal value adjustable at works) and a regulating valve. The regulating valve can be equipped with an actuator or a temperature controller (connection thread M 30 x 1.5). The flow regulator combination is mainly used for the hydronic balancing and additional temperature control of radiant ceiling panels. The connected terminal units can be flushed and drained via the integrated isolating and draining facility.

Features

- Small dimensions
- Optical display of the set nominal value even with mounted actuator
- Isolating facility
- Drain cocks with high draining capacity
- Flushing of the terminal units via the drain cocks
- Constant, high valve authority
- Presetting of the nominal values even with mounted actuator
- Linear control characteristic

Specifications

Performance data

Max. working temperature t_s: 248°F (120°C)

Min. working temperature t_s: 14°F (-10°C)

Max. working pressure p_s: 232 psig (16 bar) (1600 kPa)

Max. differential pressure: 58 psig (4 bar) (400 kPa)

Fluid: Water or mixtures of water and ethylene/propylene (max. 50%), ph value 6.5-10

Body made of brass resistant to dezincification, seals made of EPDM or PTFE, valve stem made of stainless steel.

Differential pressure "p1"-"p3": min. differential pressure depending on the nominal value setting

1" Flow control valve

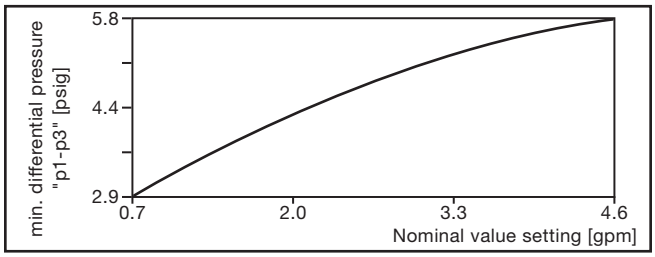

Actuator: Electrothermal, 24 V

1-1/4" Flow control valve

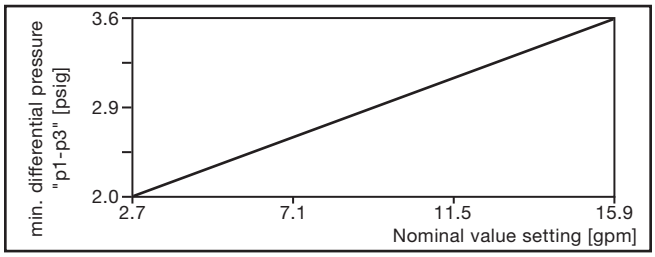

Flow control valve assembly

1. Diaphragm unit
2. Control unit
3. Flow unit
4. Isolating unit
5. Nominal value display

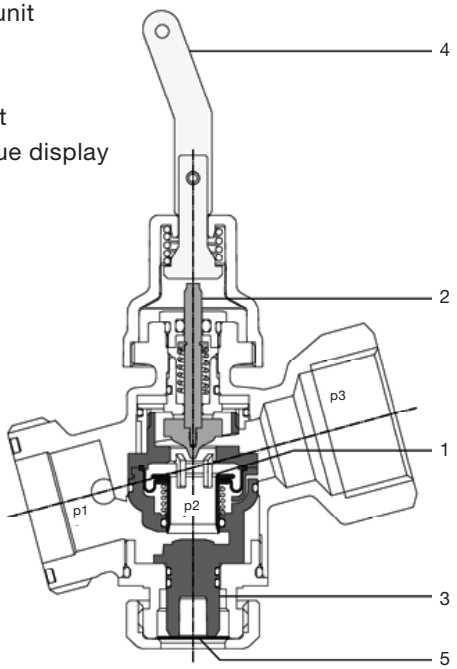

Data for actuator connection

Connection thread: M 30 x 1.5

Piston stroke: 1" valve: (1/8") 2.8 mm,
1-1/4" valve: (5/32") 4 mm

Closing dimension: 11.8 mm

Closing pressure (actuator): 90 - 150 N

Flow control valve

Function

The flow rate is preset. The preset nominal value is displayed in the field inside the lower cap. Operation during low demand periods is controlled via an actuator or temperature controller which is screwed onto the regulator.

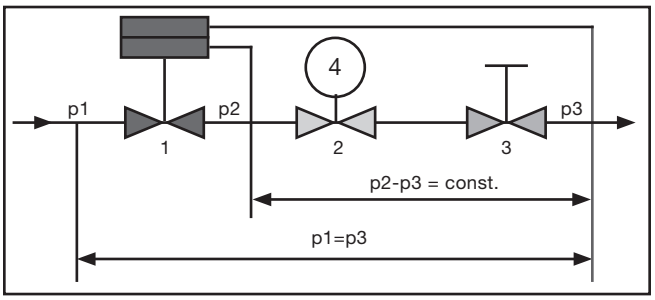

The illustrated section of the flow regulator shows three pressure ranges. "p1" is the inlet and "p3" the outlet pressure of the regulator. "p2" is the pressure actuating the diaphragm unit and maintaining the differential pressure "p2" - "p3" at a constant level. The flow regulator combines the functions of three valves. The integrated diaphragm unit (pos. 1) acts as a differential pressure regulator and guarantees a constant regulation of the differential pressure "p2" - "p3" across the second valve (control unit activated through the actuator or temperature controller - pos. 2) and across the third valve (flow unit adjustable at works - pos. 3). Even where high differential pressure variations "p1" - "p3" occur during part load conditions, the differential pressure "p2" - "p3" is kept at a constant level. This way, valve authorities of 100% are maintained.

1" Dimensions

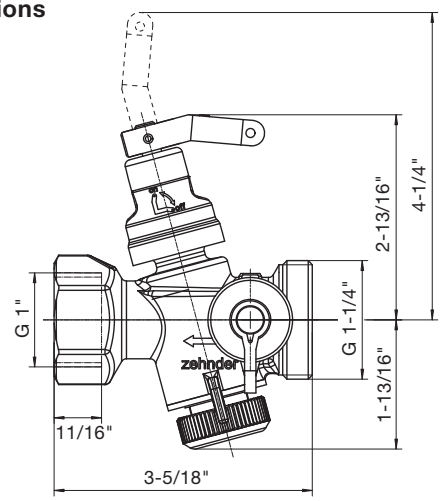

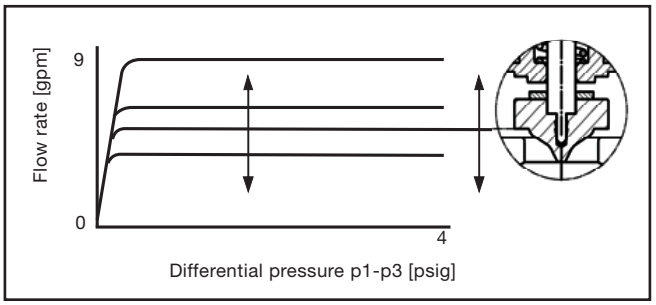

The maximum flow volume (V) within the control range is adjustable with the help of the handwheel. During low demand periods, the flow rate is regulated to the required value by the stroke position of the flow regulator.

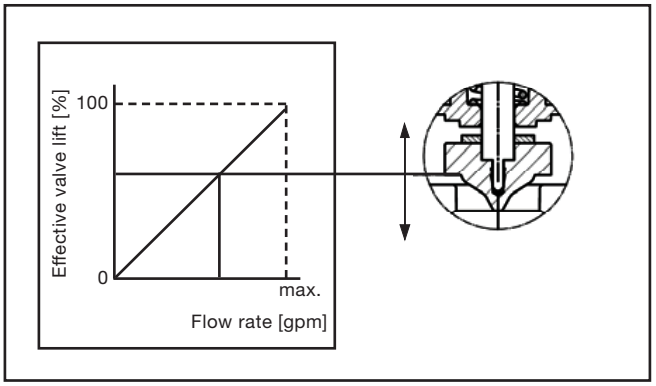

The flow regulator has a linear characteristic line which is advantageous when using actuators (electrothermal or electromotive) which also have linear stroke behavior. The regulator may also be combined with a temperature controller.

1-1/4" Dimensions

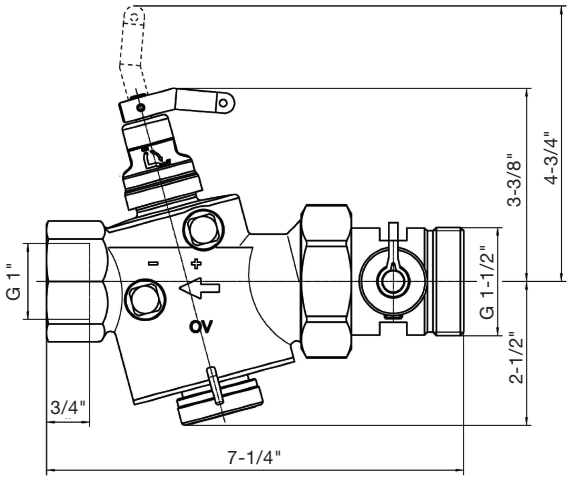

☐ Compression fitting

Function: For connecting 15 mm tubes together

Materials of construction:

Allowable operating pressure: 232 psig

Allowable temperature range: 32-248°F

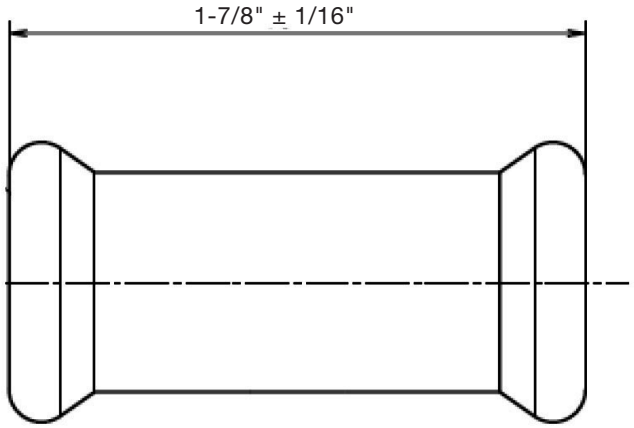

Screw fitting

Function: For connecting 15 mm tubes together

Materials of construction:

Tightening torque: Min 40 Nm

Temperature: 203°F at 87 psig

Short term peak load: 248°F

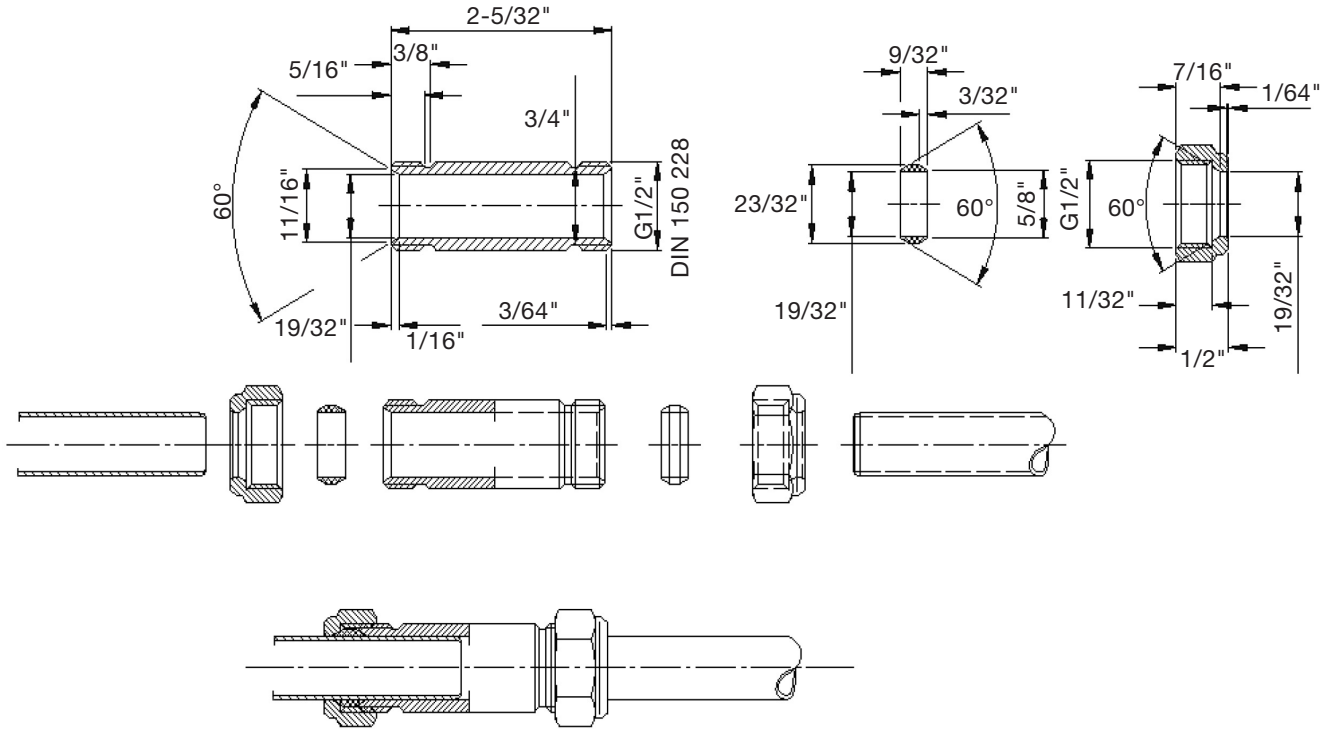

☐ Stainless steel flexible hose

Various installations in building services
within a temperature range of up to 212°F (100°C)

Maximum operating pressure:
1" & 1-1/4" 145 psig (10 bar)

Construction:

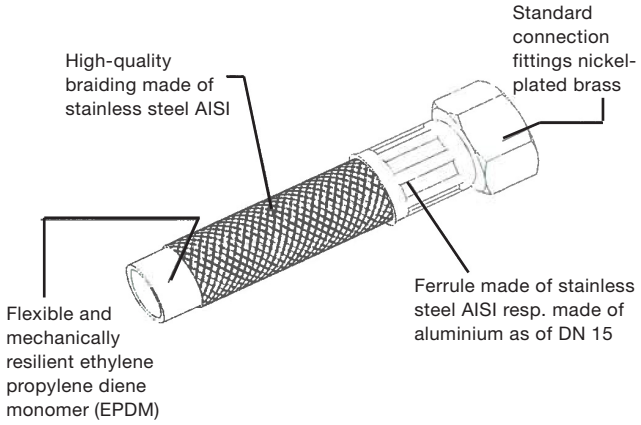

Material Features:
The EPDM rubber hose material stands out for its high mechanical resilience, e.g. at tensile stress or loads of temperature changes. It is most flexible and shows a high thermal resistance.

The use of this rubber material is very versatile. It can be used for numerous applications in the field of industrial water as well as for diffusion permeable connections in heating and apparatus engineering. Further appliances develop with modern technologies as for example the use of rain water and heat pumps.

	1"	1-1/4"
Inner diameter	1"	1-1/4"
Outside diameter	1-5/16"	1-3/4"
Wall thickness	1/8"	15/64"
Max. operating pressure in psig	145	145
Max operating temperature	-4°F (-20°C) up to 212°F (100°C)	
Braiding	Stainless steel wire AISI	
Ferrules	Stainless steel AISI; as of DN 15 aluminum	
Fittings	Standard connection fittings nickel-plated brass	

Bending radius:

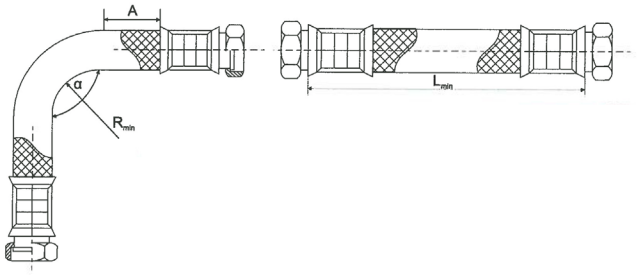

Inner material	Connections	Braiding	Nominal diameter	A and R min	L_{min}	L_{min} α = 90°	L_{min} α = 180°	L_{min} α = 360°	Max. working temperature	Max. operating pressure
EPDM (open to diffusion)	Nickel-plated brass	Stainless steel AISI 304	1"	3-15/16"	4-15/16"	18-1/8"	25-3/16"	39-3/4"	212°F	145 psi
			1-1/4"	6-5/16"	5-1/2"	27-3/4"	39"	61-7/16"		

Z-Profile Clip

Materials of construction: Galvanized Steel

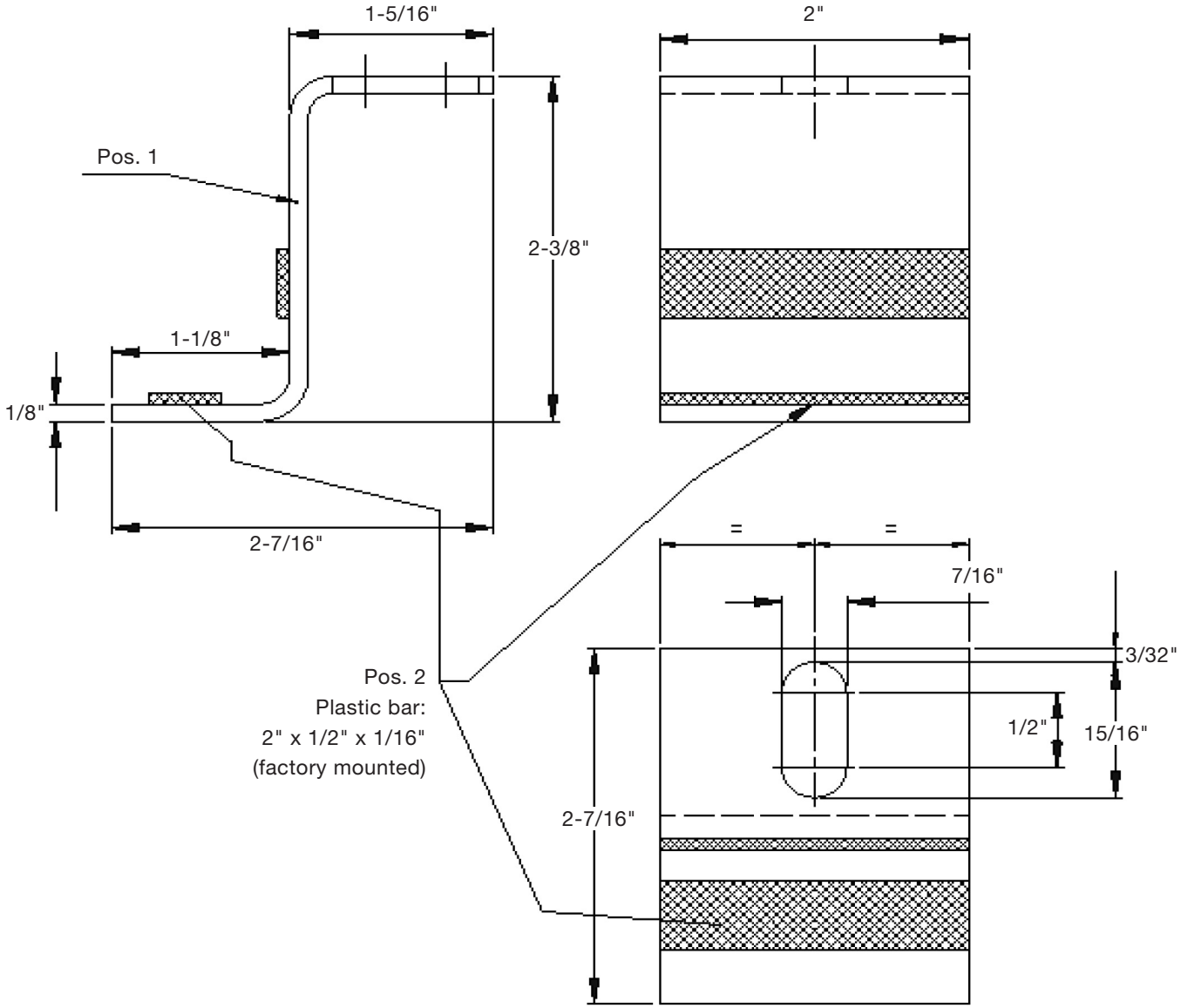

Double Z-Profile Clip

Materials of construction: Galvanized Steel

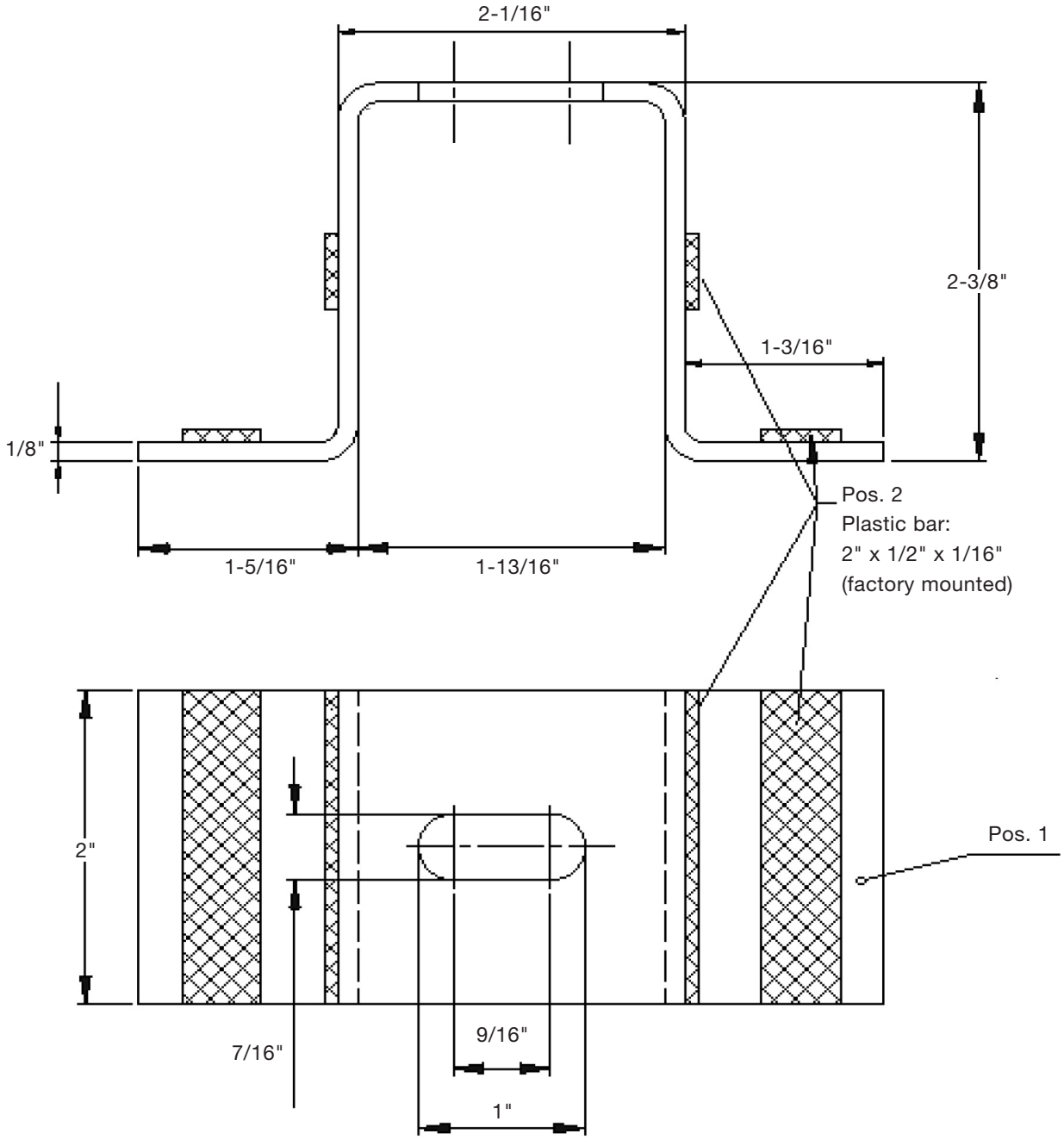

Warranty

Zehnder Rittling guarantees its products to be free from defects in material and workmanship for a period of five years from date of shipment from our Buffalo, NY factory, whichever comes first.

Should there be any defects in the good(s), the purchaser should promptly notify Zehnder Rittling. Upon receipt of written consent from Zehnder Rittling, the purchaser shall return the defective good(s) to the factory for inspection with freight prepaid. If inspection shows the goods to be defective, Zehnder Rittling will at its discretion repair or replace the said item(s).

Defects arising from damage due to shipment, improper installation, negligence or misuse by others are not covered by this warranty.

This warranty is extended only to the original purchaser from Zehnder Rittling.

Zehnder North America· 100 Rittling Boulevard · Buffalo, NY USA 14220
T 844-934-6337 (844-ZEHNDER) · F 716-827-6523
sales@zehnder-rittling.com · www.zehnder-rittling.com